TOP-OF-THE-TABLE- page 2

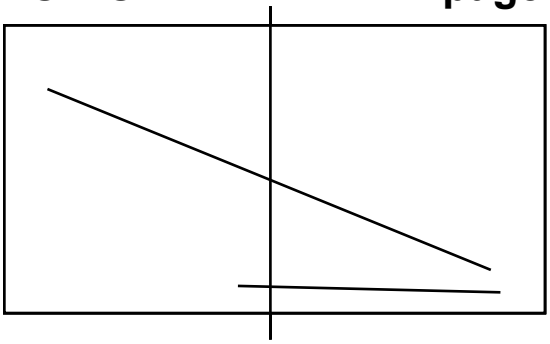

6.
“Short or long serve”.
Short serve to fh or long serve to bh, free.
Variation: Short serve to bh or long to fh.

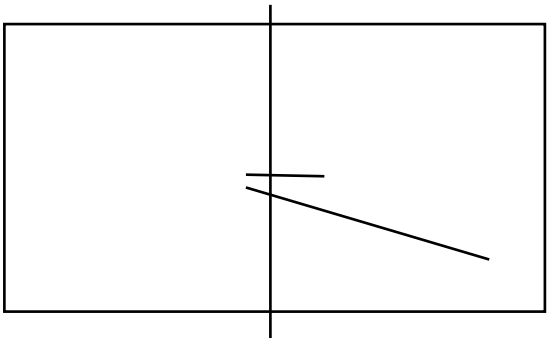

7.
“Short serve, short return”.
Short serve free, short return free, free.
Variantion 1: The server has to flick.
Variantion 2: The serves and/or returns shall be in spesific positions (ex. middle, fh, bh).

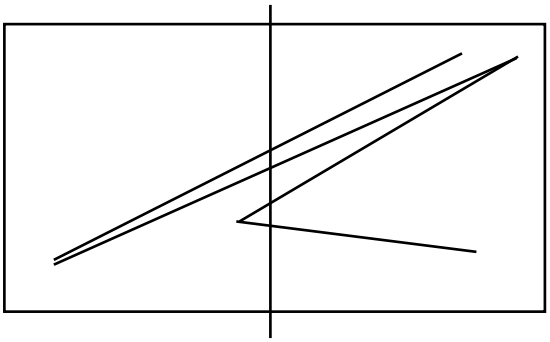

8.
“Flick and loop on loop”.
Short serve to fh-side, flick to fh, loop to fh, loop back again, free.
Variation: Short serve to fh, short return to fh, flick and then the loop on loop.

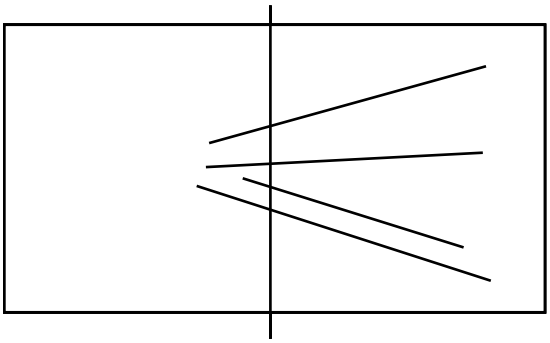

9.
“Open on push”.
Backspin serve, long push all table. Open up, free.
Variantion: The serves shall be to spesific positions (ex. middle, fh, bh).

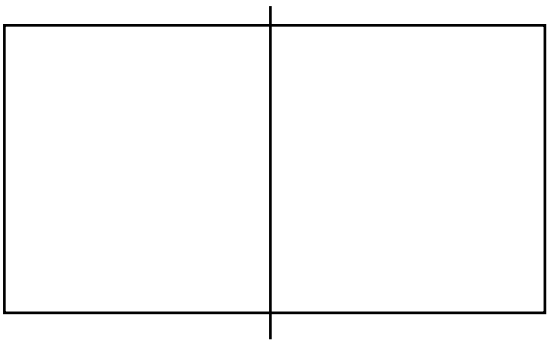

10.